NB2DSK01 - CAN Port

The NB2DSK01 provides a standard CAN (Controller Area Network) interface. The interface provides the ability to send and receive data over a bus conforming to the CAN 2.0B specification.

A DB9M connector is used to provide the connection to the external CAN bus.

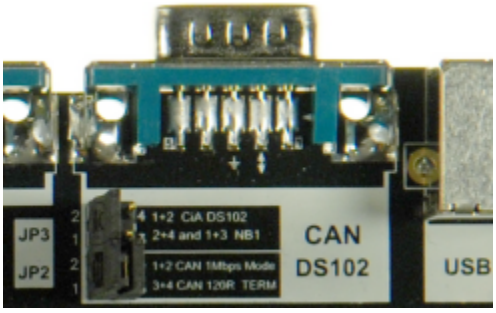

Figure 1. CAN interface port.

Providing the interface between a CAN Controller – which is placed within the FPGA design – and the physical CAN bus itself, is a high-speed MAX3051EKA-T CAN Transceiver device (from Maxim). This device essentially provides signal translation – from digital to differential voltage (suitable for transmission over the CAN bus) and vice-versa.

On the design side, transmit (`TXD`) and receive (`RXD`) signals are wired between the MAX3051 and two pins of the daughter board FPGA device. On the CAN bus side, the differential signals `CANH` and `CANL` are wired to the DB9M connector. `CANH` and `CANL` reflect the state of the `TXD` input to the MAX3051 and hence dictate the state of the CAN bus (from the NB2DSK01's perspective):

- **Dominant** – the differential voltage (`CANH - CANL`) is greater than an internal threshold voltage (0.75V). This corresponds to the `TXD` input being Low.
- **Recessive** – the differential voltage (`CANH - CANL`) is lower than an internal threshold voltage (0.75V). This corresponds to the `TXD` input being High.

The `RXD` output signal sent back to the daughter board FPGA is simply the converse – a reflection of the current state of the CAN bus. `RXD` will be Low if the bus is in a Dominant state and High if in a Recessive state.

The MAX3051 is powered from the NB2DSK01's 3.3V supply and can operate at speeds up to 1Mbps. Normal operation of the device, as used on the NB2DSK01, runs between two modes:

- **Slope Control** (default) – the slope of the signal transitions on the `CANH` and `CANL` lines are controlled (limited) by an external 15k resistor, helping to further reduce electromagnetic interference (EMI). The maximum operating speed in this mode is 800kbps. Unshielded twisted-pair cabling can be used for the CAN Bus when operating in this mode.
- **High Speed** – the slope of the signal transitions on the `CANH` and `CANL` lines are not limited by an external resistor, giving faster output rise and fall times to support high speed CAN bus data rates (up to 1Mbps). In this mode, EMI problems can be avoided by use of shielded twisted-pair cable for the CAN Bus.

Two configurable jumper headers – designated `JP2` and `JP3` – are provided to enable further configuration of the CAN interface, such as enabling 'High Speed' mode, in accordance with design requirements. Tables 1 and 2 summarize the effect of jumper placement on these headers.

Table 1. JP3 header jumper placement.

Jumper Position	Description
1-2	Put a jumper on these pins to configure the DB9M connector in accordance with the CAN in Automation Draft Standard 102 (CiA DS102) for two-wire differential transmission. The action of the jumper is to connect pin 9 of the connector to +5V, via a 350mA fuse. All other pins of the connector are already connected as required: • pin 2 to `CANL` • pin 7 to `CANH` • pins 3 and 6 connected to `GND` • pins 10 and 11 connected to `SHIELD` • pins 1, 4, 5 and 8 unconnected.
2-4 and 1-3	Put jumpers on these pins to configure the DB9M connector to operate in the same way as the CAN port for the NanoBoard-NB1. The action of the jumper on pins 2-4 is to connect pin 4 of the connector to +5V, via a 350mA fuse. The action of the jumper on pins 1-3 is to connect pin 9 of the connector to `GND`. All other pins of the connector on the NB2DSK01 are as per the NB1, with the exception of the following: • pins 3 and 6 – unconnected on the NB1 and connected to `GND` on the NB2DSK01 • pins 10 and 11 – connected to `GND` on the NB1 and `SHIELD` on the NB2DSK01.

Table 2. JP2 header jumper placement.

Jumper Position	Description
1-2	Put a jumper on these pins to place the MAX3051 CAN Transceiver device in 'High Speed' mode. With the jumper in place, slope control is essentially disabled, as the external 15k resistor providing the control is by-passed.

3-4	Put a jumper on these pins to apply a load of 120 across the `CANH` and `CANL` differential output lines. This resistance is used to unload the open-collector transceiver drivers, as well as to prevent signal reflections (other nodes on the CAN bus will have similar load resistances across their differential output lines). This jumper is inserted by default.

Location on Board

The MAX3051 device (designated `U8`) and related resistors/capacitors are located on the solder side of the board.

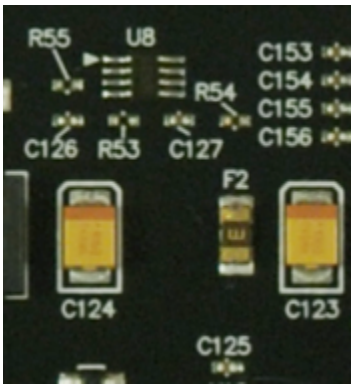

Figure 2. MAX3051 device and related circuitry.

The DB9M (Male) connector (designated `J7`) is located on the component side of the board, to the immediate right of the RS-232 interface port.

The two configurable jumper headers (`JP2` and `JP3`) are also located on the component side, directly below the DB9M connector.

The 350mA fuse (designated `F2`) is located on the solder side of the board, to the bottom-right of the MAX3051 device.

Schematic Reference

The CAN interface circuitry can be found on the following sheets of the motherboard schematics:

- **Sheet 48** (`CAN_MAX3051.SchDoc`, entitled *CAN Transceiver MAX3051*)
- **Sheet 49** (`CON_CAN_DB9M.SchDoc`, entitled *CAN Connector DB9 Male*).

Design Interface Component

Table 3 summarizes the available design interface component that can be placed from the `FPGA NB2DSK01 Port-Plugin.IntLib`, to access and use the CAN interface.

Table 3. CAN port-plugin component.

Component Symbol	Component Name	Description
	`CANCNTR`	Place this component to interface to the MAX3051 device and subsequent CAN port.

Further Device Information

For more information on the MAX3051 device, refer to the datasheet (`MAX3051.pdf`) available at www.maxim-ic.com.